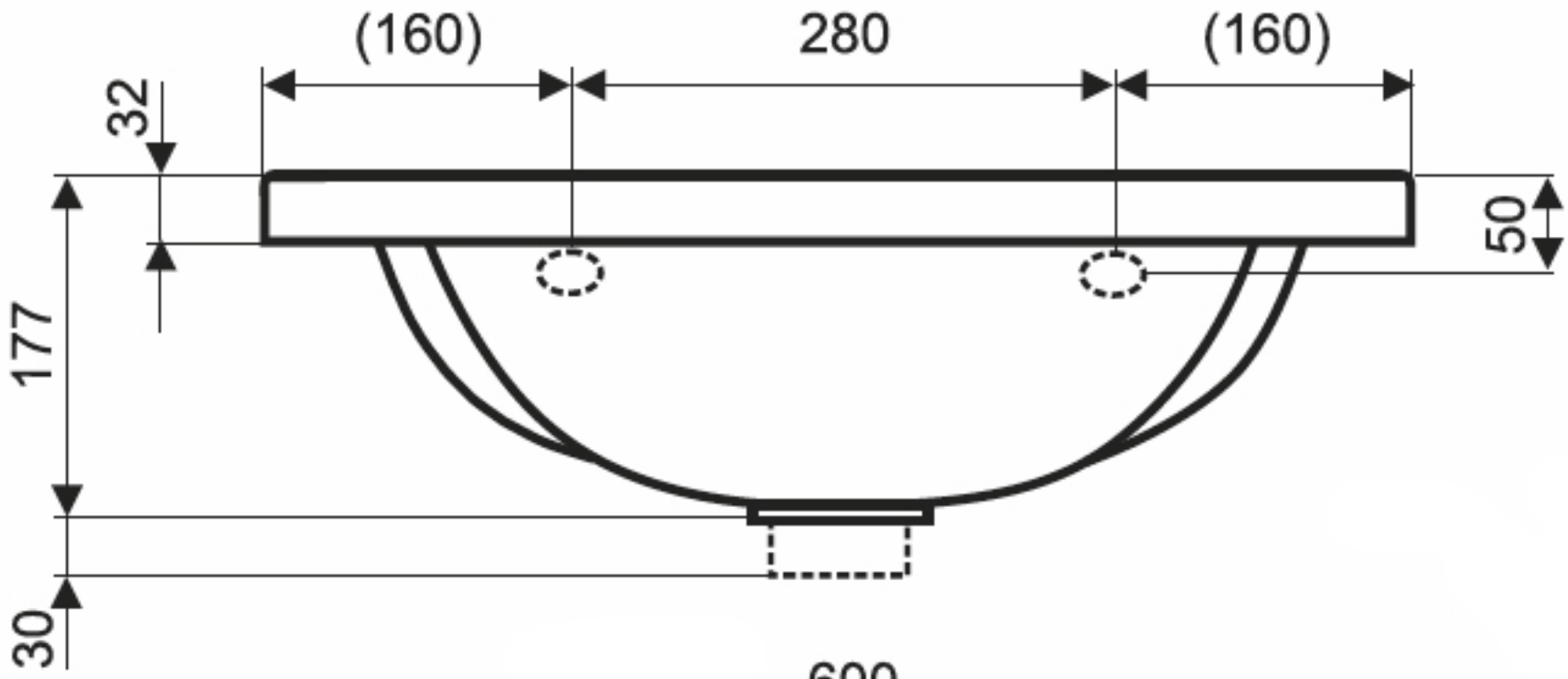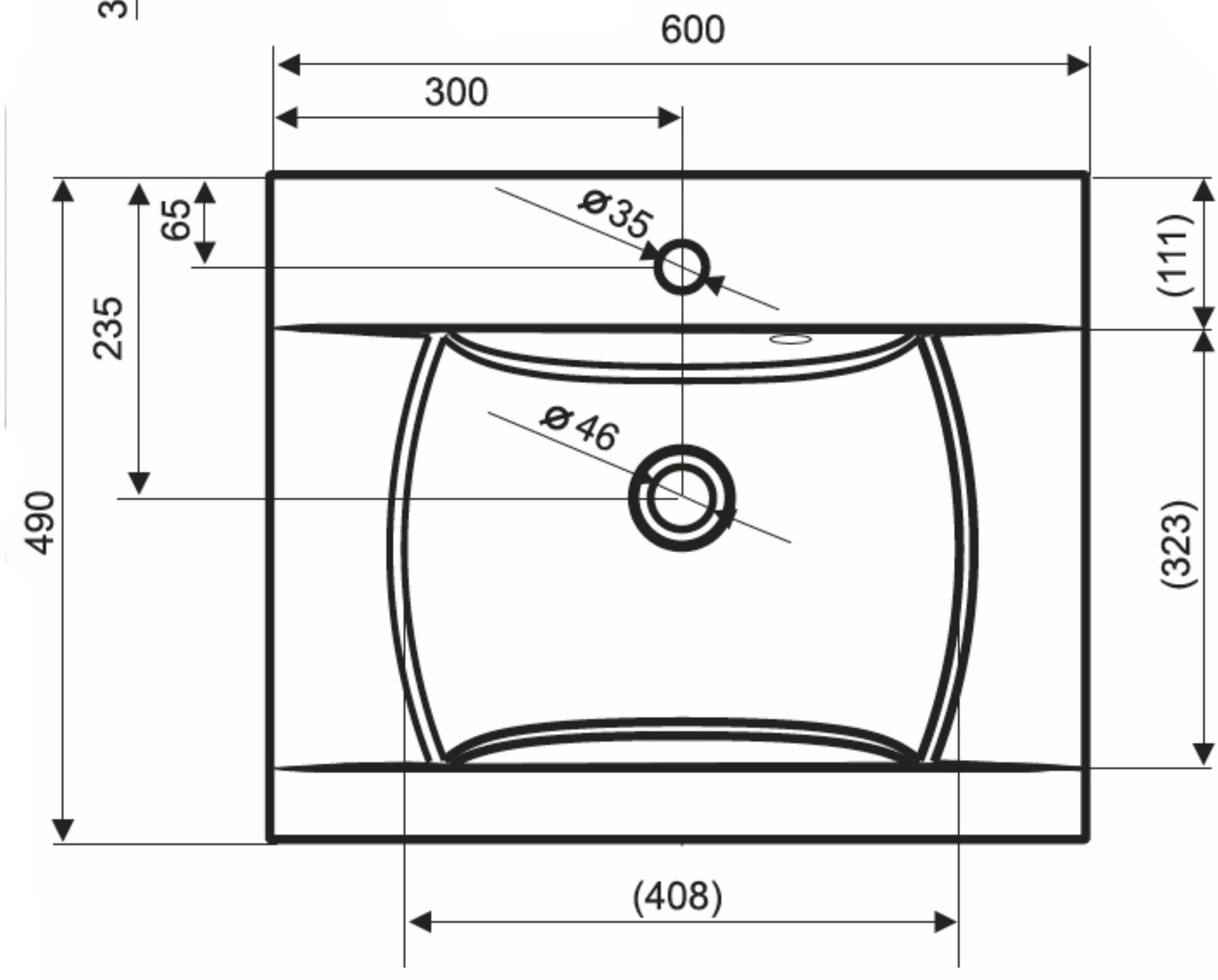CLASSIC 600